SIEMENS

Data sheet 3SB3400-1QB

ACTUATOR-/INDICATOR COMPONENT WITH INTEGRATED LED
110V AC LAMP HOLDER SCREW TERMINAL RED

Figure similar

Product designation	lampholder

Contact block/ lampholder:	
Mounting type	integrated
Number of lampholders	1

General technical data:	
Product function	
• positive opening	No
Product component	
• diode	Yes
• lamp transformer	No
• Light source	Yes
• series resistor	No
Insulation voltage	
• rated value	250 V
Degree of pollution	class 3
Surge voltage resistance rated value	4 kV
Protection class IP	
• of the enclosure	IP40

Changes preserved
© Copyright Siemens AG

• of the terminal	IP20
Equipment marking	
• acc. to DIN 40719 extended according to IEC 204-2 acc. to IEC 750	H
• acc. to DIN EN 61346-2	P
• acc. to DIN EN 81346-2	P
Operating voltage 1	
• at AC	
— at 50 Hz rated value	110 V
— at 60 Hz rated value	110 V

Supply voltage:	
Type of voltage of the supply voltage	
• of the light source	AC
Supply voltage 1 of the light source at AC	
• at 50 Hz rated value	110 V
• at 60 Hz rated value	110 V

Auxiliary circuit:	
Number of NC contacts	
• for auxiliary contacts	0
Number of NO contacts	
• for auxiliary contacts	0
Number of CO contacts	
• for auxiliary contacts	0
Consumed current for rated value of supply voltage maximum	15 mA

Connections/ Terminals:	
Type of electrical connection	screw-type terminals
Type of connectable conductor cross-sections	
• for auxiliary contacts	
— solid	2x (1.0 ... 1.5 mm²)
— solid with core end processing	2x (0.5 ... 0.75 mm²)
— finely stranded with core end processing	2x (0.5 ... 1.5 mm²)
• at AWG conductors for auxiliary contacts	2x (18 ... 14)
Tightening torque	
• for auxiliary contacts with screw-type terminals	0.8 N·m

Lamp:	
Type of light source	LED
Color of the light source	red

Ambient conditions:	
Ambient temperature	

Changes preserved
© Copyright Siemens AG

• during operation	-25 ... +70 °C
• during storage	-25 ... +80 °C

Installation/ mounting/ dimensions:

Mounting type	front mounting
Height	36 mm
Width	10 mm
Depth	20 mm

Certificates/approvals

General Product Approval			Declaration of Conformity	Test Certificates	other
CCC	CSA	EAC	EG-Konf.	spezielle Prüfbescheinigungen	Bestätigungen

other
Umweltbestätigung

Further information

Information- and Downloadcenter (Catalogs, Brochures,…)
http://www.siemens.com/industrial-controls/catalogs

Industry Mall (Online ordering system)
https://mall.industry.siemens.com/mall/en/en/Catalog/product?mlfb=3SB34001QB

Cax online generator
http://support.automation.siemens.com/WW/CAXorder/default.aspx?lang=en&mlfb=3SB34001QB

Service&Support (Manuals, Certificates, Characteristics, FAQs,...)
https://support.industry.siemens.com/cs/ww/en/ps/3SB34001QB

Image database (product images, 2D dimension drawings, 3D models, device circuit diagrams, EPLAN macros, ...)
http://www.automation.siemens.com/bilddb/cax_de.aspx?mlfb=3SB34001QB&lang=en

Changes preserved
© Copyright Siemens AG

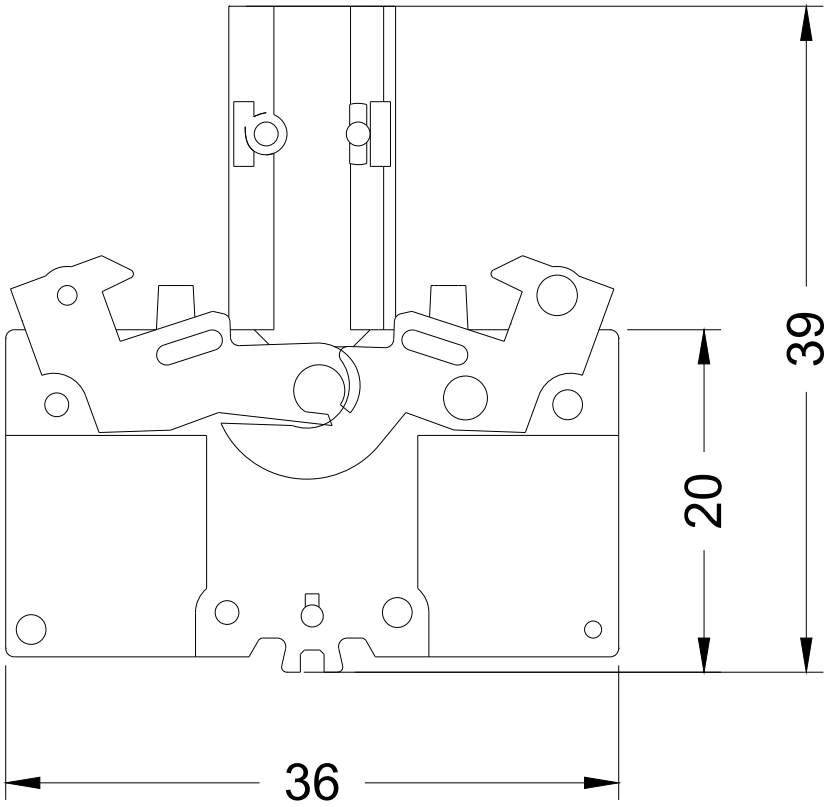

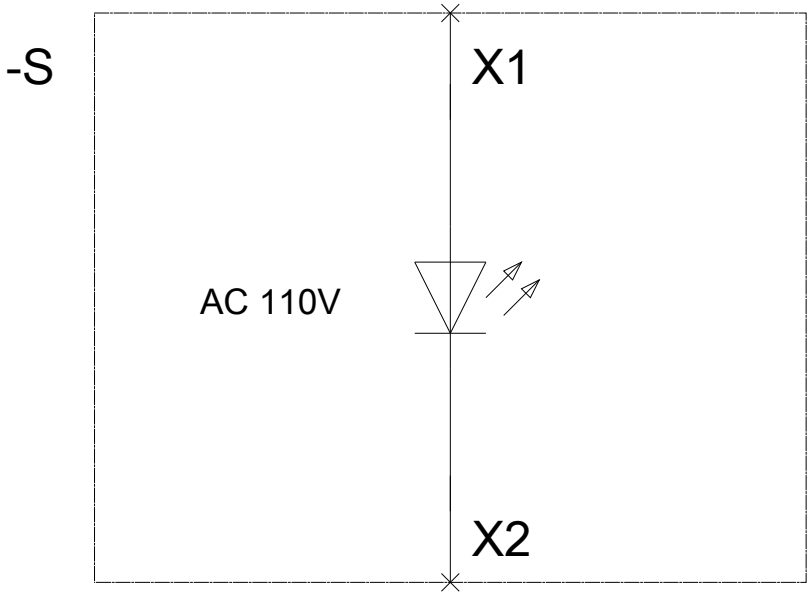

last modified: 04.04.2016

Changes preserved
© Copyright Siemens AG